SHURflo SERIES 8000
Product Data Sheet

MODEL: 8005-243-256

SPECIFICATIONS:

MODEL NUMBER: 8005-243-256
PUMP DESIGN: Positive Displacement 3 Chamber Diaphragm Pump
CHECK VALVE: (1-Way Operation) Prevents Reverse Flow
CAM: 3.0 Degree
MOTOR: Permanent Magnet, P/N 11-148-04, Thermally Protected
VOLTAGE: 12 VDC Nominal
PRESSURE SWITCH: Adjustable Shut-Off (Range 40-60 PSI)
Factory Set @ 60 PSI, Turn On 45 PSI ± 5 PSI
LIQUID TEMPERATURE: 170 Degrees Fahrenheit (77 Degrees Centigrade) Max.
PRIME: Self-Priming Up To 11 Ft. Vertical,
Max. Inlet Pressure 30 PSI (2.1 Bar)
PORTS: 3/8"-18 NPT Female
MATERIAL OF CONSTRUCTION:
PLASTICS- Polypropylene
VALVES- EPDM
DIAPHRAGM- Santoprene
FASTENERS- Zinc Plated Steel
NET WEIGHT: 3.8 Lbs (1.72 Kg)
DUTY CYCLE: Intermittent (See Temperature Rise Chart)
APPROVALS: NSF Listed
TYPICAL APPLICATIONS: Water Delivery
BYPASS: 45 PSI
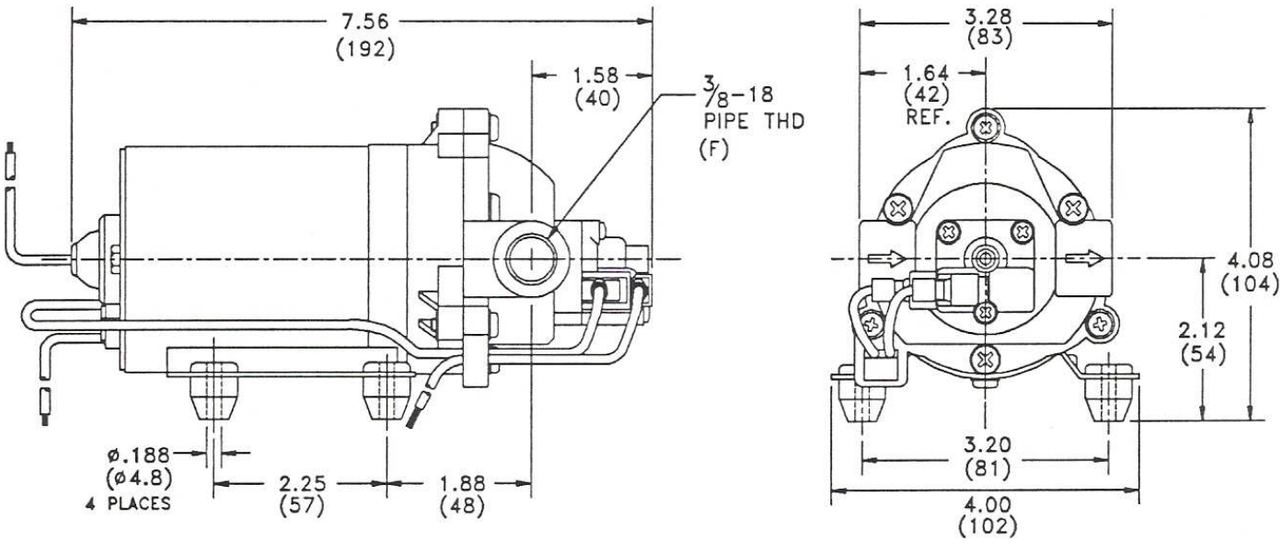
DIMENSIONS: